H Type Pressure Control Valves

These valves are hydraulically damped, direct operated, pressure control valves which can be actuated by internal or external pilot pressure. There are various types of valve including sequence, unloading and low pressure relief valves, all of which are operated by a pressure rise in the circuit, sensed either internally or remotely.

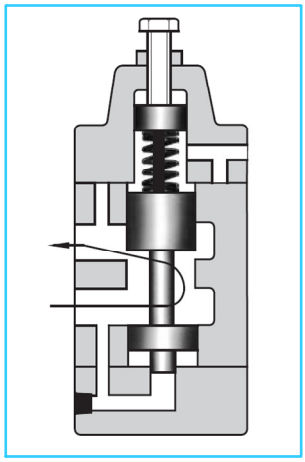

Specifications

Model Numbers		Max. Operating Pressure Kgf/cm^2	Max. Flow L/min.	Mass Kg.	
Threaded Connection	Sub-Plate Mounting			Threaded Connection	Sub-Plate Mounting
HT-03-※※-※-2280	—	210	50	3.7	4
HT-06-※※-※-2280	—		125	6.2	6.1
HT-10-※※-※-2280	HG-10-※※-※-10		250	12	11

Model Number Designation

F-	H	T	-10	-C	3	-P	-22	※
Special Seals	Series Number	Type of Mounting	Valve Size	Pres. Adj. Range Kgf/cm^2	Valve Type *1	With Auxiliary Pilot Pressure	Design Number	Design Standard
F: Special Seals for Phosphate Ester Type Fluids. (Omit if not required)	**H:** H Type Pressure Control Valves	**T:** *2 Threaded Connection	**03**	**L:** 2.5~4.5 **M:** 4.5~9 **N:** 9~18 **A:** 18~35 **B:** 35~70 **C:** 70~140	**1** *3 **2** **3** **4**	**P:** *4 With Auxiliary Pilot Pressure	**22**	**80**
			06					
			10					
		G: Sub-plate Mounting	—				—	—
			—				—	—
			10				**10**	—

*1 For details of valve types, see the following page.
*2 Consult YUKEN for availability.
*3 Type 1 is only possible for pressure adjustment ranges L and M.
*4 Model with auxiliary pilots are used where valves must be operated under a lower external pilot pressure than the adjusted pressure (types N, A and B about 1/8 of adjusted pressure; type C: about 1/16). This does not apply to pressure adjustment ranges L and M, and valve type 1.

Valve Types

- **H Type**

Valve Type	Type 1: Low Pres. Relief Valve	Type 2: Sequence Valve	Type 3: Sequence Valve	Type 4: Unloading Valve
Pilot-Drain Type	Internal Pilot-Internal Drain	Internal Pilot-External Drain	External Pilot-External Drain	External Pilot-Internal Drain
Operations	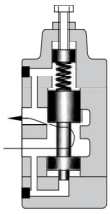	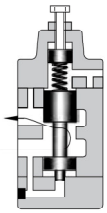	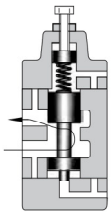	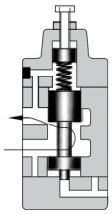
Graphic Symbols		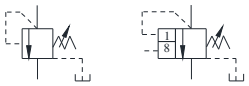 With auxiliary pilot port	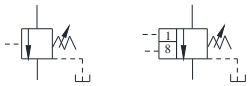 With auxiliary pilot port	 With auxiliary pilot port
Description	Can be used as low-pressure relief valve, but be careful to occurrence of surge pressure.	Used to control the operational sequence of 2 or more actuators. If primary pressure exceeds the pressure setting, effective fluid is delivered to the secondary side.	Used for the same purpose as for the type 2. Operated by external pilot pressure irrespective of primary pressure.	Used as unloading valve. If external pilot pressure exceeds the pressure setting, the pump is turned no-load by releasing all fluid to the tank.

Instructions

- To adjust the pressure, loosen the lock nut and turn the pressure adjustment screw slowly clockwise to increase pressure or anti-clockwise to decrease pressure. After adjustments, do not forget to tighten the lock nut.
- Connect the secondary side pressure ports of types 1 and 4 (internal drain) and the drain ports of types 2 and 3 (external drain) directly to the tanks with a back pressure close to the atmospheric pressure.
- There are two threaded connection primary pressure ports. They can be connected each other in-line; one as inlet and the other as an outlet or the valve can be used by plugging one of the pressure ports.

Attachment

- **Mounting Bolts**

Valve Model Number	Socket Head Cap Screw	Qty.	Bolt Kit Number
HG-10	M10 x 50Lg.	6	BKHG-10-10

Sub-plate

Valve Model Numbers	Sub-Plate Model Numbers	Thread Size	Mass Kg.
HG-10-※※	HGM-10-2080	1-1/4 BSP.F	4.8
	HGM-10X-2080	1-1/2 BSP.F	5.7
HG-10-※※-P	HGM-10-P-2080	1-1/4 BSP.F	4.8
	HGM-10X-P-2080	1-1/2 BSP.F	5.7

- Sub-plates are available. Specify the sub-plate model number from the table above.
  When sub-plates are not used, the mounting surface should have a good machined finish.

HT-03,06,10-※※-※-2280

DIMENSIONS IN MILLIMETRES

Type 3: Sequence
(External Pilot, External Drain)

Model Numbers	Thread Size		
	"Q" Thd.	"S" Thd.	"T" Thd.
HT-03	3/8 BSP.F	1/4 BSP.F	1/4 BSP.Tr
HT-06	3/4 BSP.F		
HT-10	1-1/4 BSP.F		

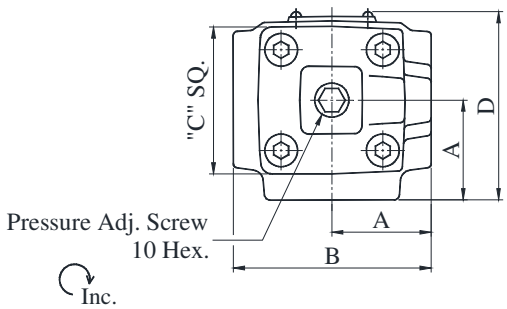

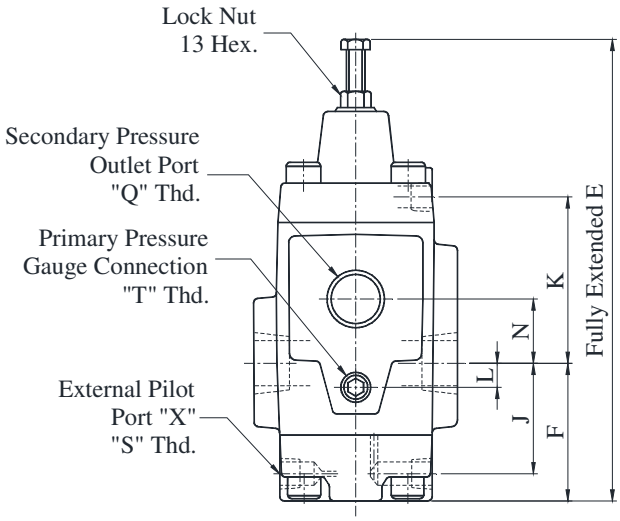

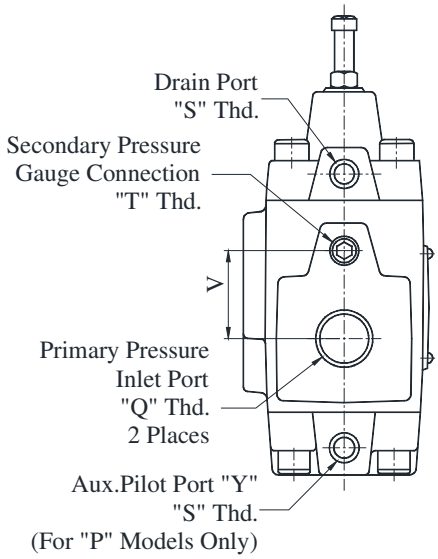

Model Numbers	Dimensions mm										
	A	B	C	D	E	F	J	K	L	N	V
HT-03	41	82	60	74	191	57	43	70	0	28	28
HT-06	48	96	73	87	221	64.5	50.5	80.5	9	33	42
HT-10	66	132	86	112	272	84	66	98	12	40	52

Type 1:Low Pressure Relief Valve
(Internal Pilot, Internal Drain)

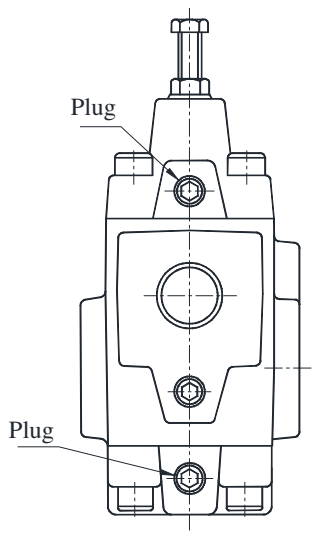

Type 2: Sequence Valve
(Internal Pilot, External Drain)

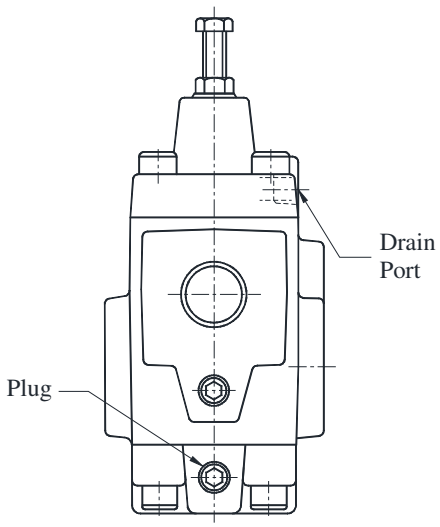

Type 4: Unloading Valve
(External Pilot, Internal Drain)

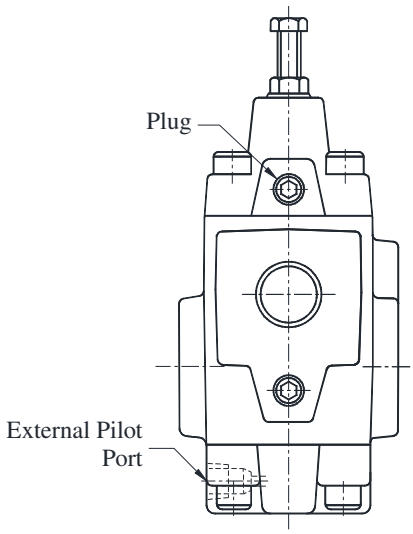

HG-10-※※-※-10

Type 3: Sequence
(External Pilot, External Drain)

Mounting Surface
ISO 5781-AJ-10-2-A

DIMENSIONS IN MILLIMETRES

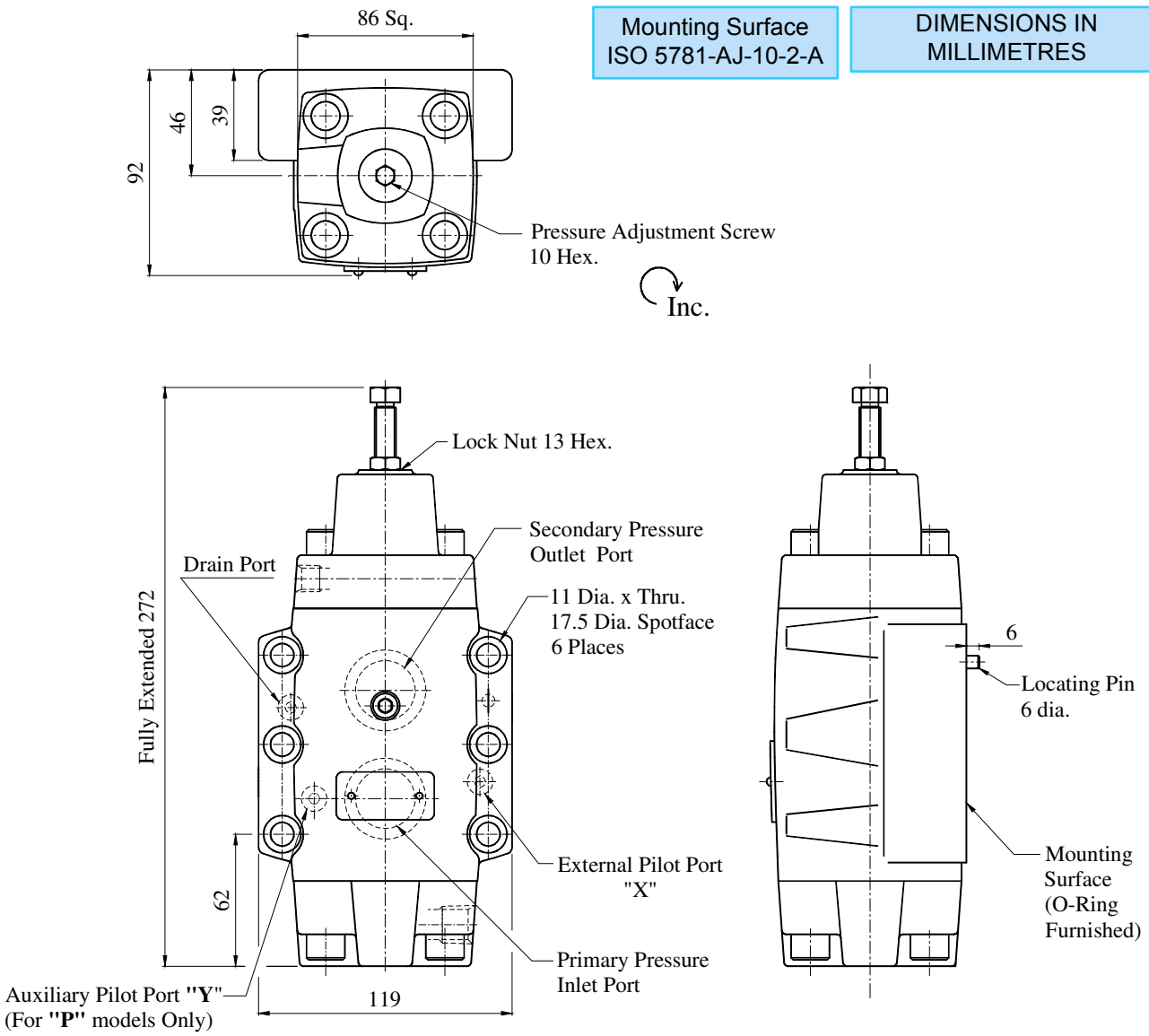

Type 1:Low Pressure Relief Valve (Internal Pilot, Internal Drain)	**Type 2: Sequence Valve** (Internal Pilot, External Drain)	**Type 4: Unloading Valve** (External Pilot, Internal Drain)
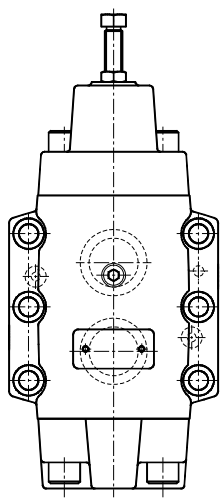	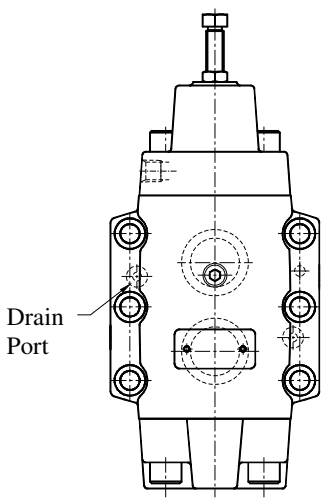	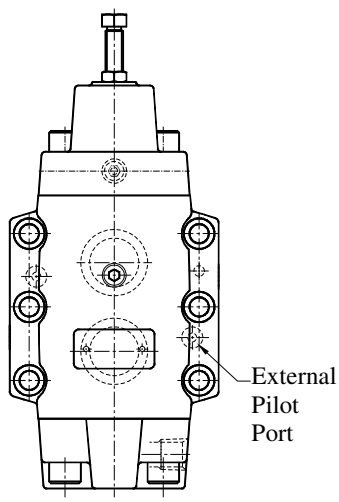

HGM-10-2080
HGM-10-P-2080

DIMENSIONS IN MILLIMETRES

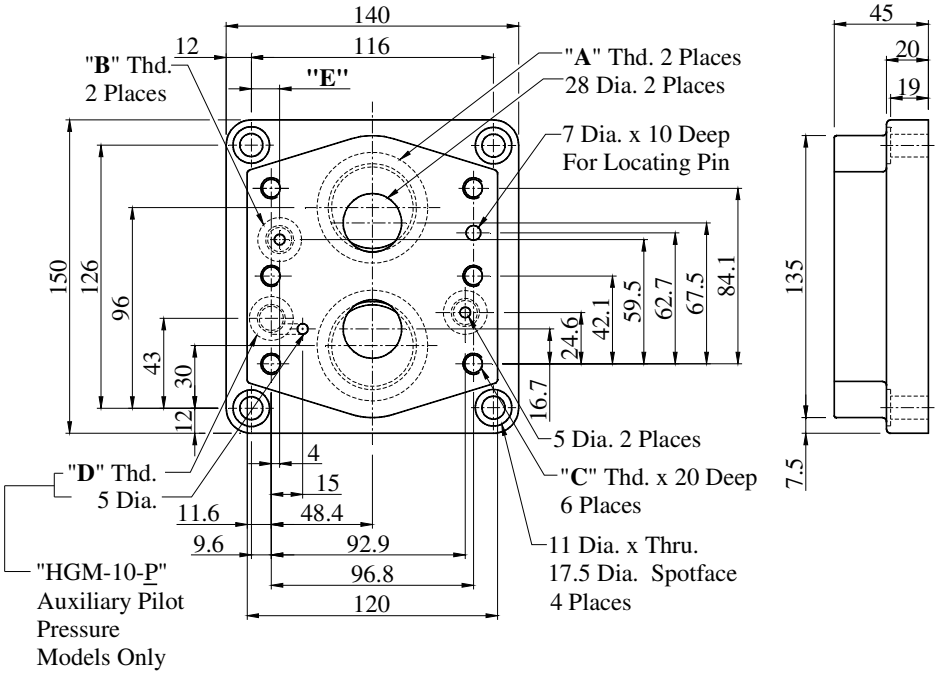

Sub-Plate Model Numbers	"A" Thd.	"B" Thd.	"C" Thd.	"D" Thd.	"E"
HGM-10-2080	1-1/4 BSP.F	1/4 BSP.F	M10	1/4 BSP.F	13.6
HGM-10-P-2080					9.6

HGM-10X-2080
HGM-10X-P-2080

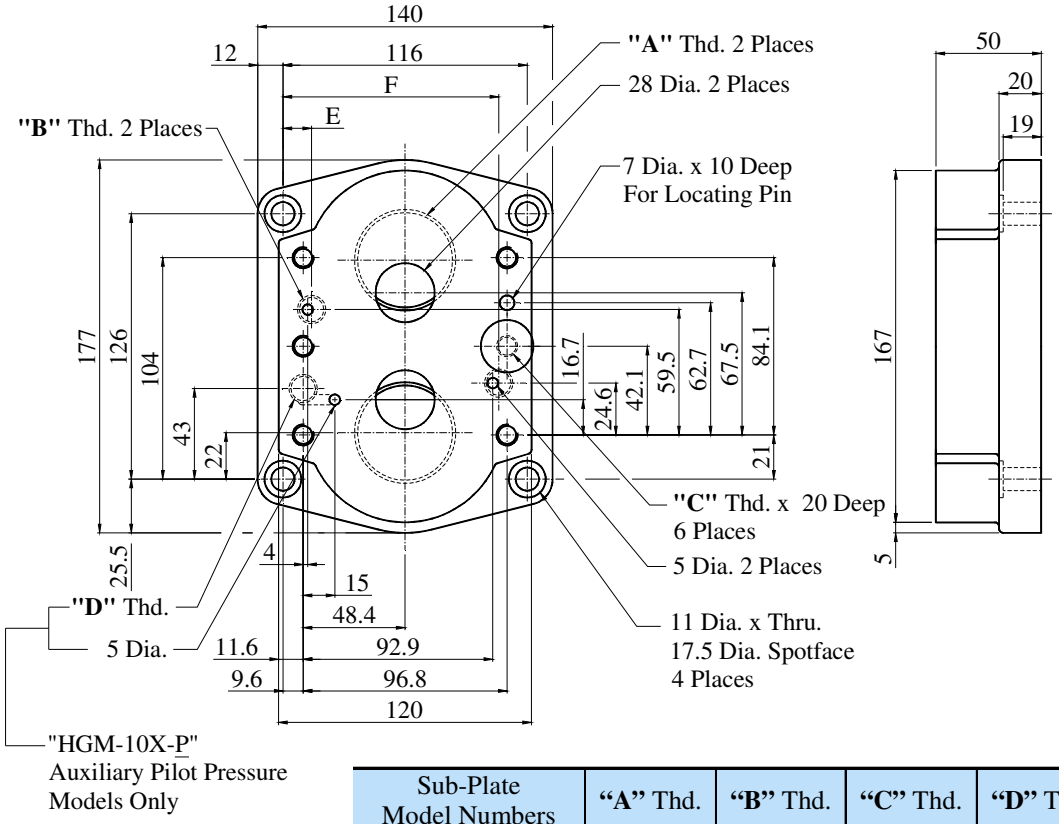

Sub-Plate Model Numbers	"A" Thd.	"B" Thd.	"C" Thd.	"D" Thd.	E	F
HGM-10X-2080	1-1/2 BSP.F	1/4 BSP.F	M10	1/4 BSP.F	13.6	102.5
HGM-10X-P-2080					9.6	106

HC Type Pressure Control Valves

These valves are hydraulically damped, direct operated, pressure control valves which can be actuated by internal or external pilot pressure. They are available with integral check valves for use when reverse free flow from the secondary port to the primary port is desired. There are various types of valve including sequence counterbalance valves, all of which are operated by a pressure rise in the circuit, sensed either internally or remotely.

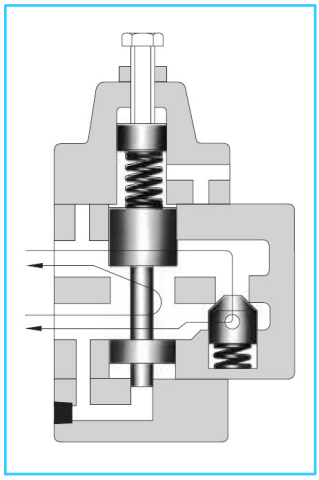

Specifications

Model Numbers		Max. Operating Pressure Kgf/cm^2	Max. Flow L/min.	Mass (Approx.) Kg.	
Threaded Connection	Sub-Plate Mounting			Threaded Connection	Sub-Plate Mounting
HCT-03-※※-※-2280	—	210	50	4.1	4.8
HCT-06-※※-※-2180	HCG-06-※-※-※-21		125	7.1	7.4
HCT-10-※※-※-2280	HCG-10-※-※-※-21		250	13.8	13.8

For Check Valve pressure drops, see free flow pressure drop characteristics.

Model Number Designation

F-	HC	T	-03	-C	3	-P	-21	80
Special Seals	Series Number	Type of Mounting	Valve Size	Pres. Adj. Range Kgf/cm^2	Valve Type *1	With Auxiliary Pilot Pressure	Design Number	Design Standards
F: Special Seals for Phosphate Ester Type Fluids. (Omit if not required)	**HC:** HC Type Pressure Control Valves	**T:** *2 Threaded Connection	**03**	**L:** 2.5~4.5 **M:** 4.5~9 **N:** 9~18 **A:** 18~35 **B:** 35~70 **C:** 70~140	**1** *3 **2** **3** **4**	**P:** *4 With Auxiliary Pilot Pressure	**22**	**80**
			06				**21**	
			10				**22**	
		G: Sub-plate Mounting	—				—	—
			06				**21**	
			10				**21**	

*1 For details of valves types, see the following page.
*2 Consult YUKEN for availability.
*3 Type 1 is only possible for pressure adjustment ranges L and M.
*4 Models with auxiliary pilot are used where valves must be operated under a lower external pilot pressure than the adjusted pressure (types N, A and B: about 1/8 of adjusted pressure; type C: about 1/16). This does not apply to pressure adjustment ranges L and M, and valve type 1.

Valve Types

- **HC Type**

Valve Type	Type 1: Counterbalance Valve	Type 2: Sequence and Check Valve	Type 3: Sequence and Check Valve	Type 4: Counterbalance Valve
Pilot-Drain Type	Internal Pilot-Internal Drain	Internal Pilot-External Drain	External Pilot-External Drain	External Pilot-Internal Drain
Operations	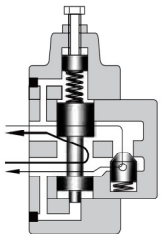	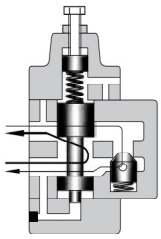	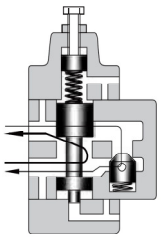	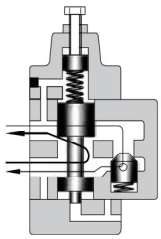
Graphic Symbols	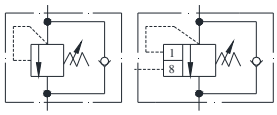 With auxiliary pilot port	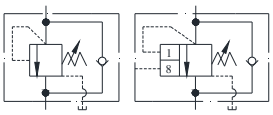 With auxiliary pilot port	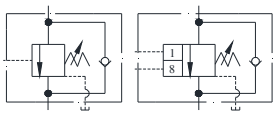 With auxiliary pilot port	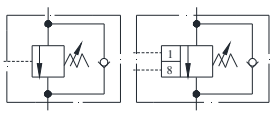 With auxiliary pilot port
Description	Used to prevent gravitational falls by generating a pressure on the actuator return side. If Primary pressure exceeds the pressure setting, fluid is released to keep the pressure constant.	Used to control the operating sequence of two or more actuators. If primary pressure exceeds the pressure setting effective fluid is delivered to the secondary side. Reversed flow is free by check valve.	Used for same purpose as for type 2. Operated by external pilot pressure irrespective of primary pressure. Reversed flow is free by check valve.	Used for the same purpose as for type 1. Operated by External pilot pressure irrespective of primary pressure. Reversed flow is free by check valve.

Instructions

- To adjust the pressure, loosen the lock nut and turn the pressure adjustment screw slowly clockwise to increase pressure or anti-clockwise to decrease pressures. After adjustments, do not forget to tighten the lock nut.
- Connect the secondary side primary pressure ports of types 1 and 4 (internal drain) and the drain ports of types 2 and 3 (external drain) directly to the tanks with a back pressure close to the atmospheric pressure.
- There are two threaded connection primary pressure ports with HCT type. They can be connected each other in-line; one as inlet and the other as an outlet or the valve can be used by plugging one of the pressure ports.

Attachment

- **Mounting Bolts**

Valve Model Numbers	Socket Head Cap Screw	Qty.	Bolt Kit Ordering Code
HCG-06	M10 x 80Lg.	4	BKHCG-06-20
HCG-10	M10 x 90Lg.	6	BKHCG-10-20

Sub-plate

Valve Model Numbers	Sub-Plate Model Numbers	Thread Size	Mass Kg.
HCG-06-※※	HGM-06-2080	3/4 BSP.F	2.4
	HGM-06X-2080	1 BSP.F	3.0
HCG-06-※※-P	HGM-06-P-2080	3/4 BSP.F	2.4
	HGM-06X-P-2080	1 BSP.F	3.0
HCG-10-※※	HGM-10-2080	1-1/4 BSP.F	4.8
	HGM-10X-2080	1-1/2 BSP.F	5.7
HCG-10-※※-P	HGM-10-P-2080	1-1/4 BSP.F	4.8
	HGM-10X-P-2080	1-1/2 BSP.F	5.7

- Sub-Plate are available. Specify the sub-plate model from the table above. When sub-plate are not used, the mounting surface should have a good machined finish.

* Sub-Plates are same as applicable to HG-10-※※-※-10 valves. For dimensions refer page no. 287.

HCT-03,10-※※-※-2280

Type 3: Sequence and Check Valve
(External Pilot, External Drain)

DIMENSIONS IN MILLIMETRES

Model Numbers	Thread Size		
	"Q" Thd.	"S" Thd.	"T" Thd.
HCT-03	3/8 BSP.F	1/4 BSP.F	1/4 BSP.Tr
HCT-10	1-1/4 BSP.F		

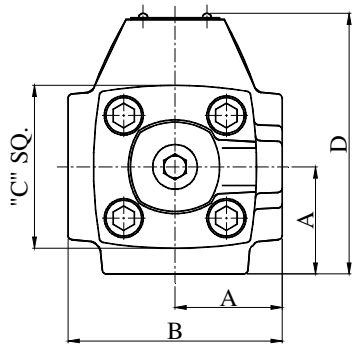

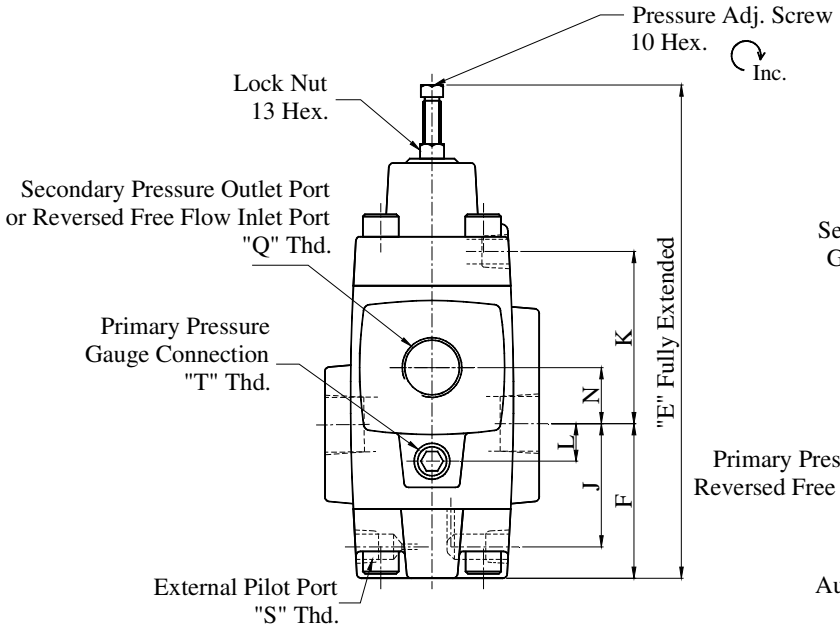

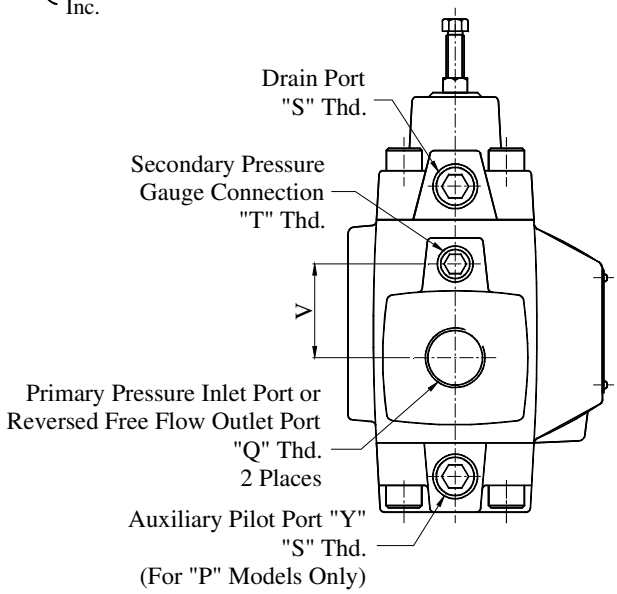

Model Numbers	Dimensions mm										
	A	B	C	D	E	F	J	K	L	N	V
HCT-03	41	82	60	96	191	57	43	70	0	28	28
HCT-10	66	132	86	152	272	84	66	98	12	40	52

Type 1: Counterbalance Valve
(Internal Pilot, Internal Drain)

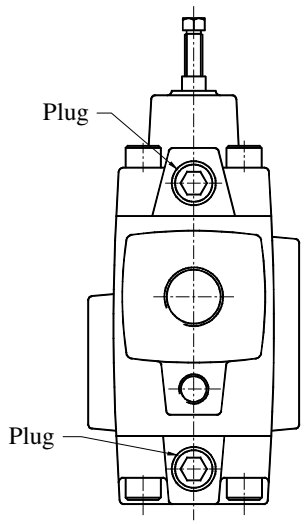

Type 2: Sequence and Check Valve
(Internal Pilot, External Drain)

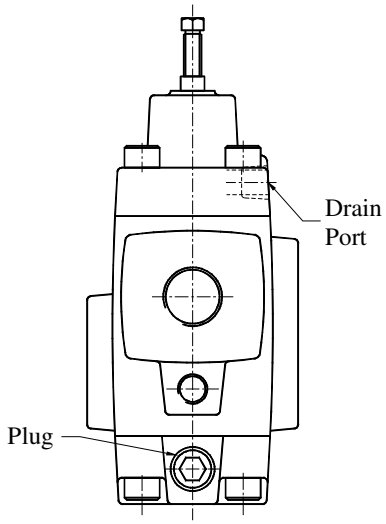

Type 4: Counterbalance Valve
(External Pilot, Internal Drain)

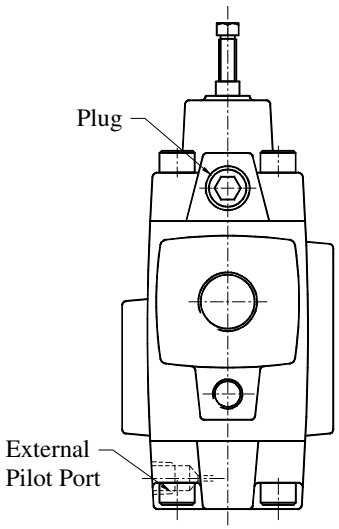

HCT-06-※※-※-2180

DIMENSIONS IN MILLIMETRES

Type 3: Sequence and Check Valve
(External Pilot, External Drain)

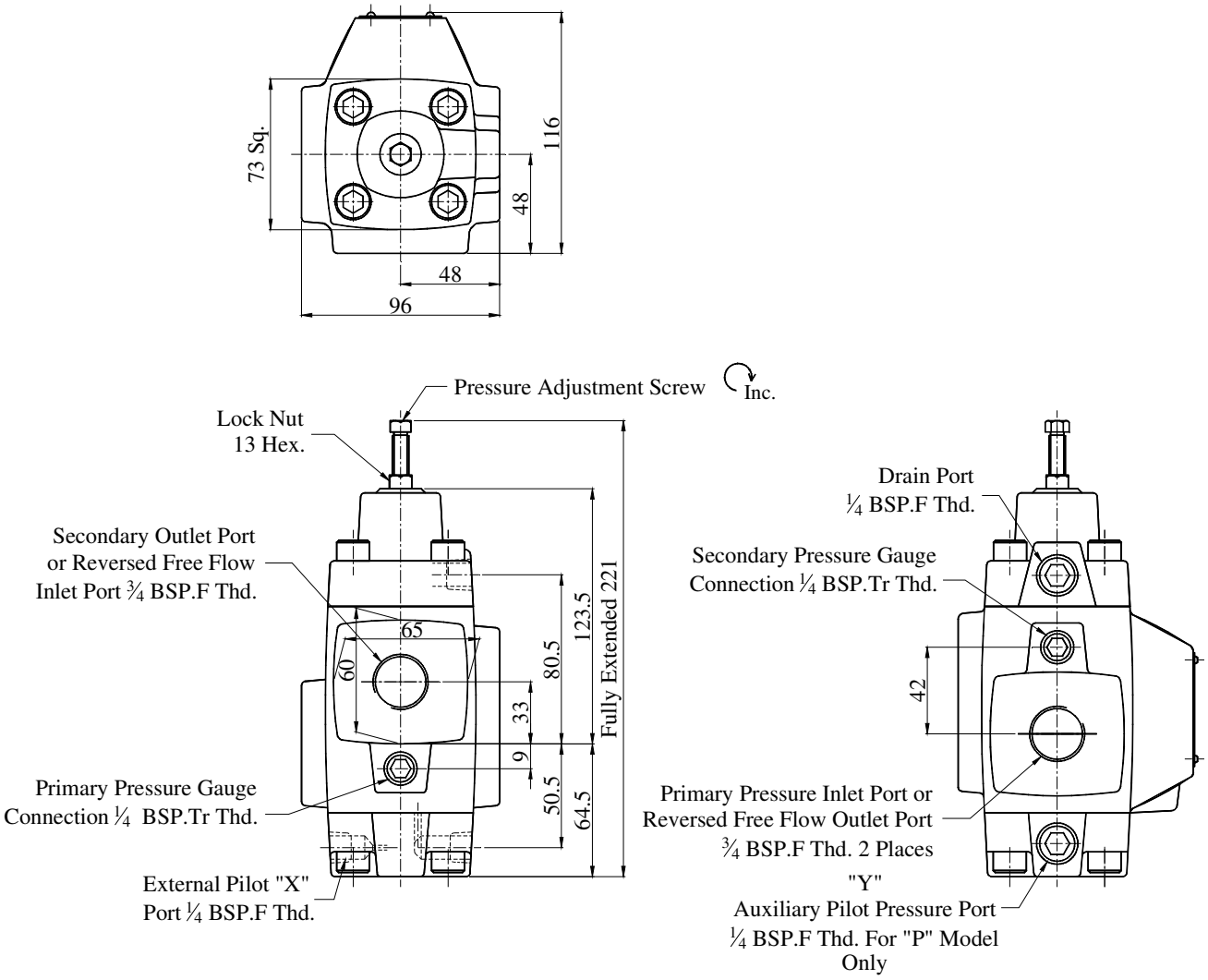

Type 1: Counterbalance Valve (Internal Pilot, Internal Drain)	**Type 2: Sequence and Check Valve** (Internal Pilot, External Drain)	**Type 4: Counterbalance Valve** (External Pilot, Internal Drain)
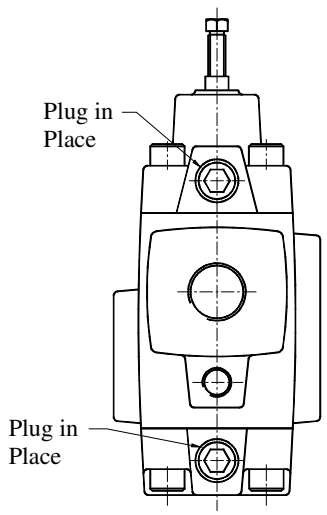	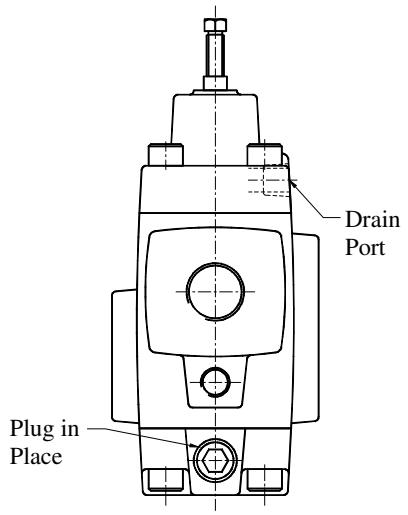	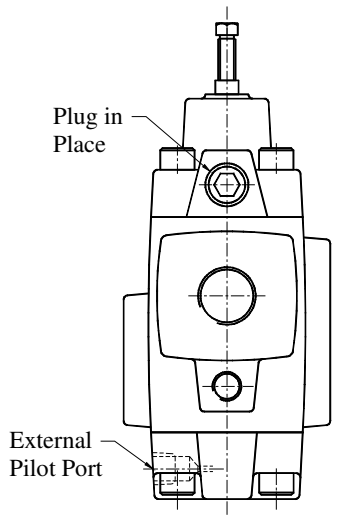

HCG-06-※※-※-21

Mounting Surface
HCG-06: ISO 5781-AH-08-2-A

DIMENSIONS IN MILLIMETRES

Type 3: Sequence and Check Valve
(External Pilot, External Drain)

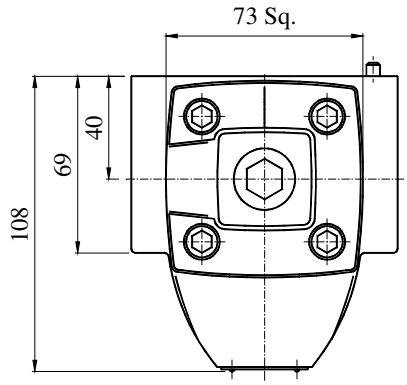

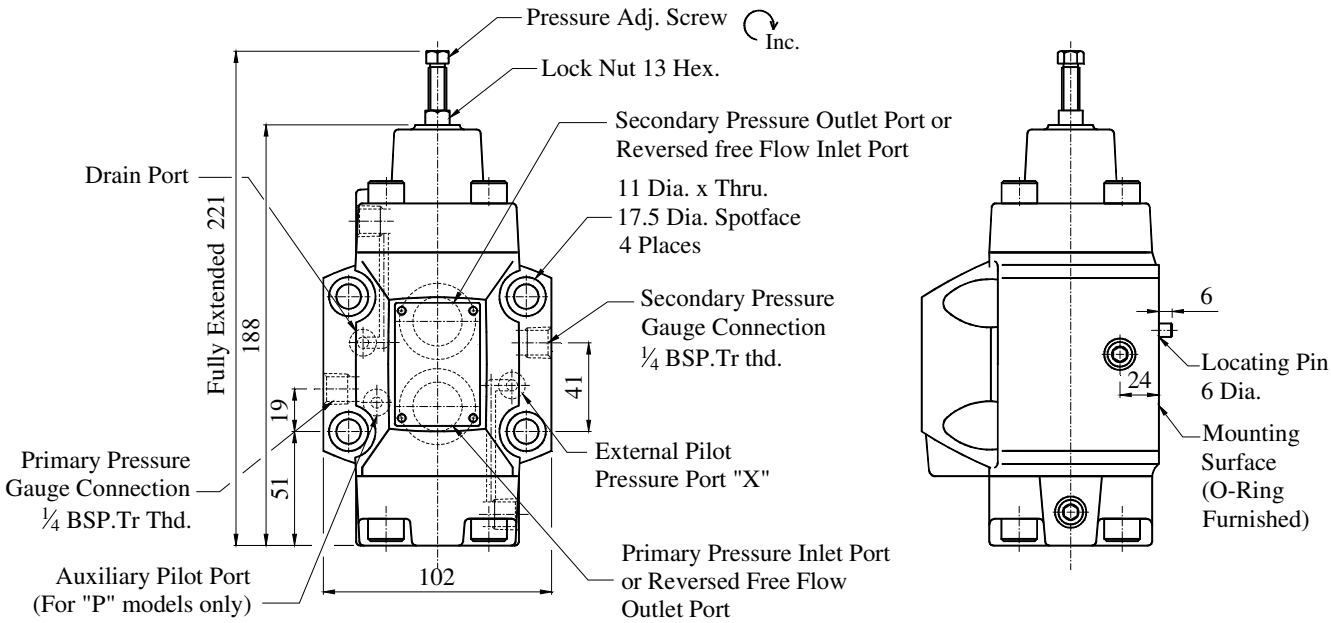

Type 1: Counterbalance Valve (Internal Pilot, Internal Drain)	Type 2: Sequence and Check Valve (Internal Pilot, External Drain)	Type 4: Counterbalance Valve (External Pilot, Internal Drain)
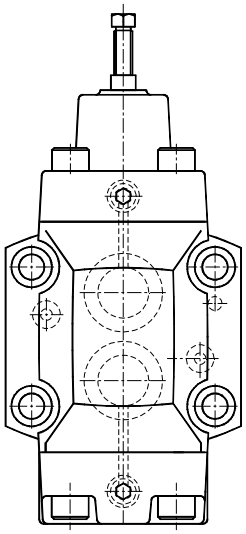	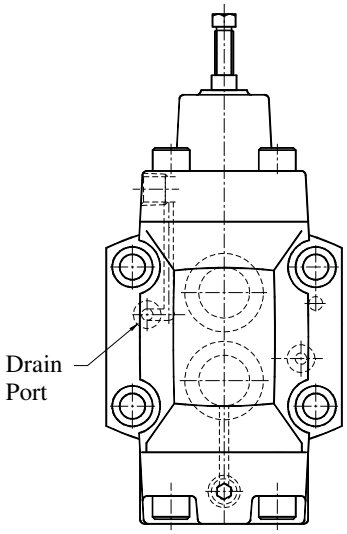	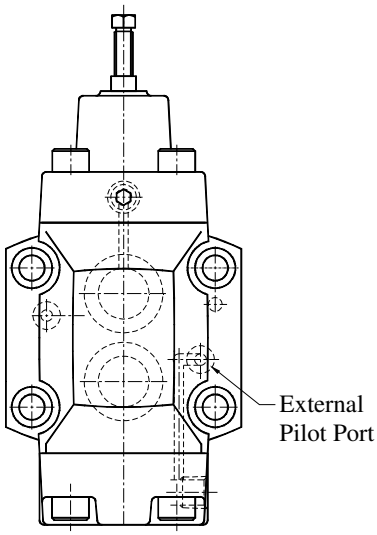

HCG-10-※※-※-21

Mounting Surface
ISO 5781-AJ-10-2-A

DIMENSIONS IN MILLIMETRES

Type 3: Sequence and Check Valve
(External Pilot, External Drain)

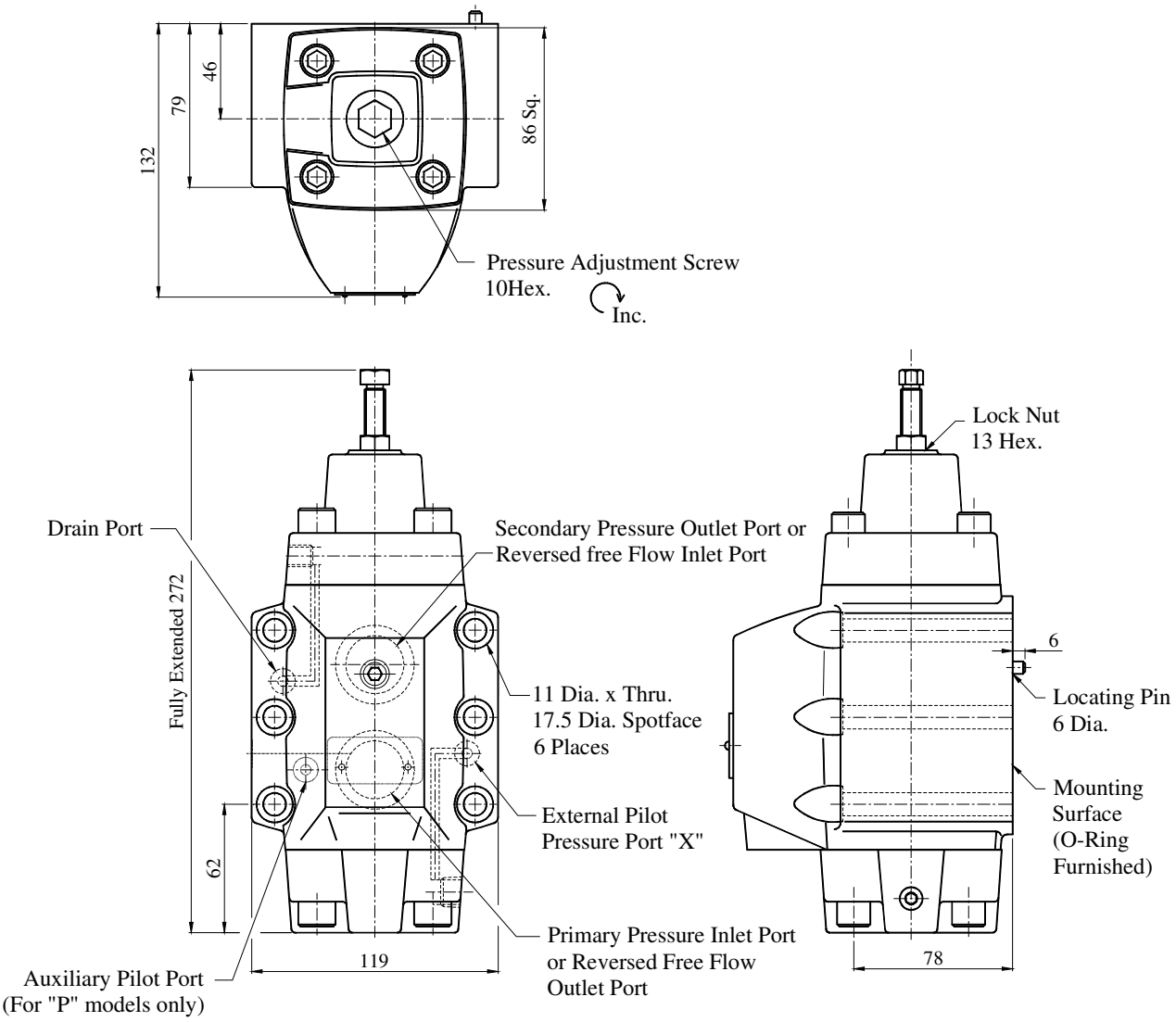

Type 1: Counterbalance Valve (Internal Pilot, Internal Drain)	Type 2: Sequence and Check Valve (Internal Pilot, External Drain)	Type 4: Counterbalance Valve (External Pilot, Internal Drain)
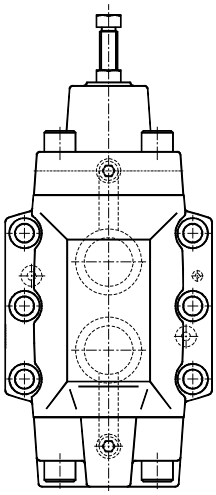	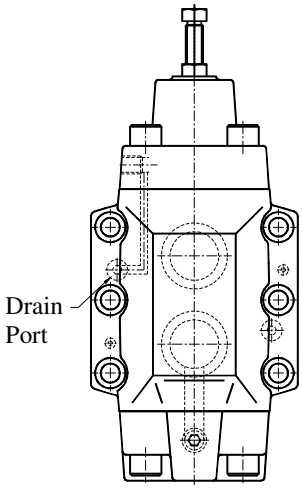	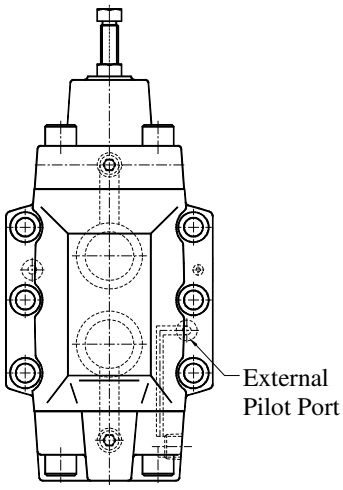

Sub-Plate : HGM -$\frac{06}{06X}$-※-2080

DIMENSIONS IN MILLIMETRES

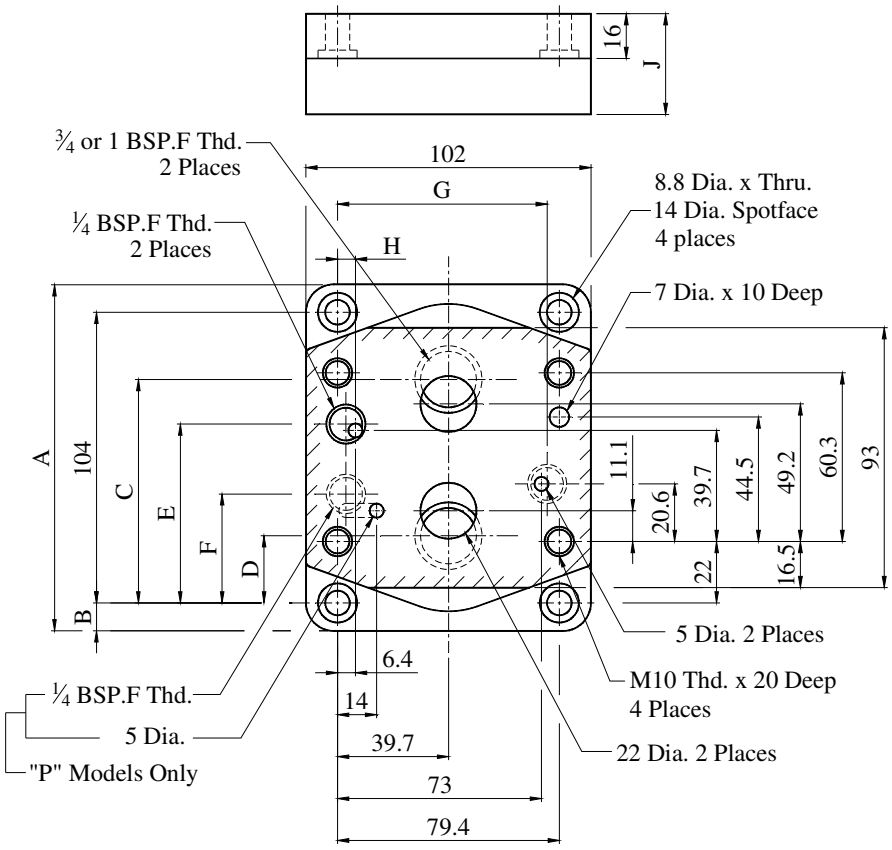

Sub Plate Model Numbers	Thread Size BSP.F	A	B	C	D	E	F	G	H	J	Mass (Approx.) Kg.	Recommended Max. Flow Capacity L/min.
HGM-06-2080	3/4	124	10	77	27	61.7	39	73	6.4	36	2.4	80
HGM-06X-2080	1	136	16	80	22	61.7		75	6.4	45	3	125
HGM-06-P-2080	3/4	124	10	77	27	64		73	3	36	2.4	80
HGM-06X-P-2080	1	136	16	82.3	22	64		75	3	45	3	125

Pressure Drop for Reversed Free Flow

Hydraulic Fluid: Viscosity: 35 cSt. Specific Gravity: 0.850

HCT-03

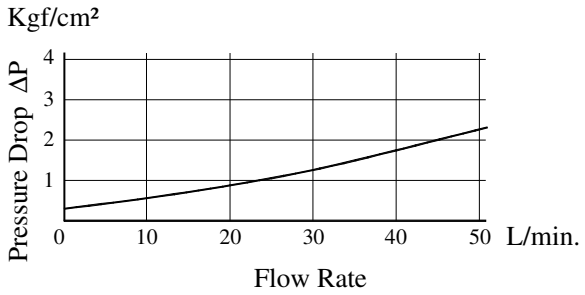

HCT-06
HCG-06

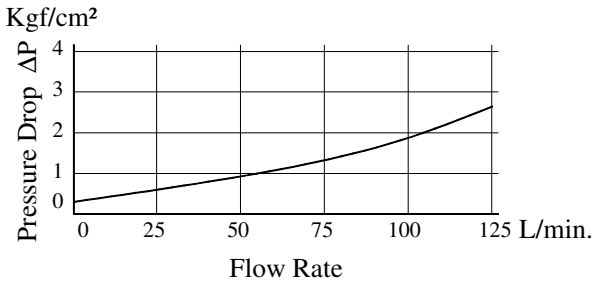

HCT-10
HCG-10

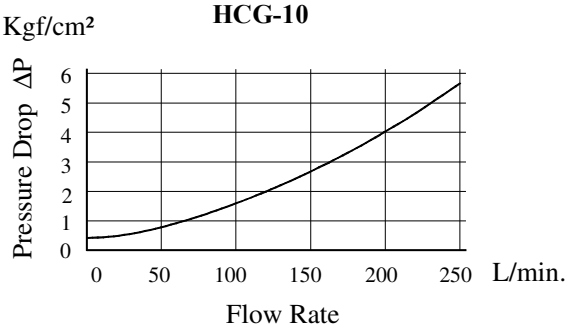

- For any other viscosity, multiply the factors in the table below.

Viscosity	cSt	15	20	30	40	50	60	70	80	90	100
Factor		0.81	0.87	0.96	1.03	1.09	1.14	1.19	1.23	1.27	1.30

- For any other specific gravity (G), the pressure drop (ΔP`) may be obtained from the formula below.
  $\Delta P` = \Delta P\ (G`/0.850)$

Nominal Override Characteristics

Hydraulic Fluid: Viscosity: 35 cSt. Specific Gravity: 0.850

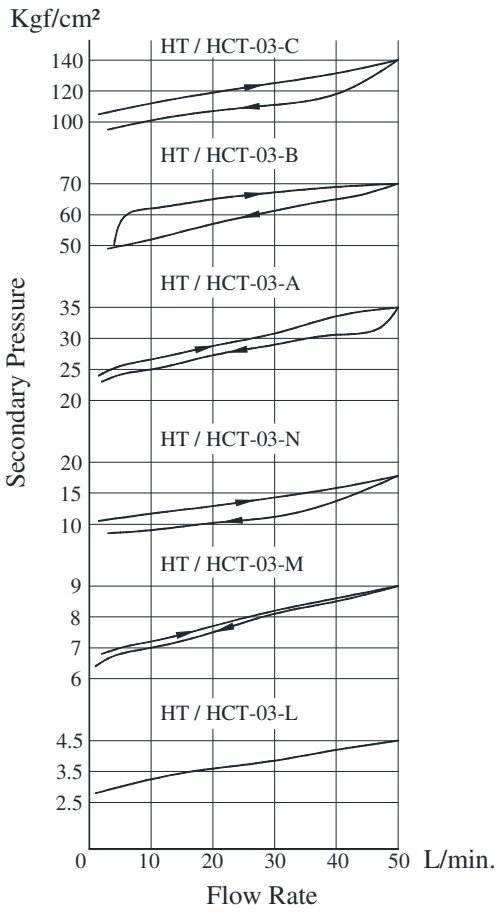

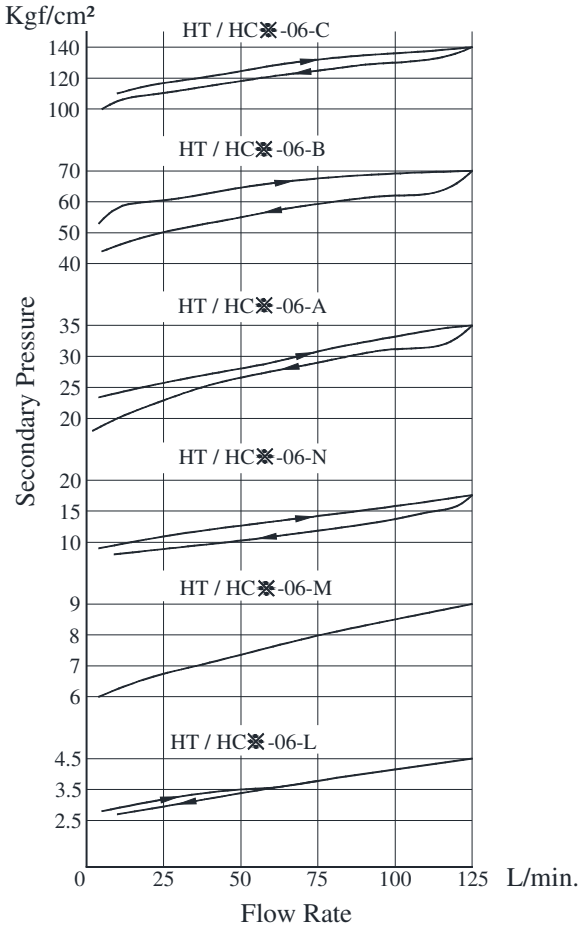

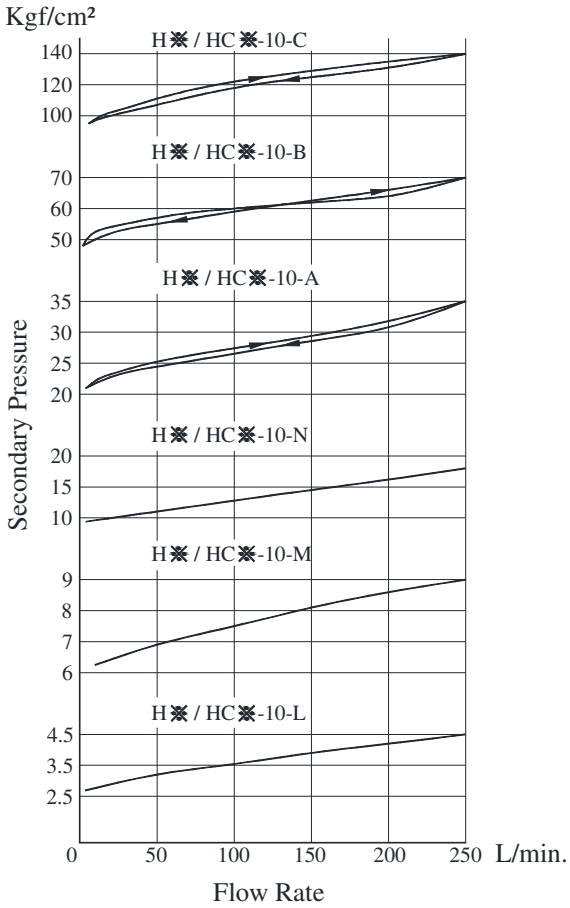

Spare Parts List

HT-03,06,10-※※-※-2280
HG-10-※※-※-10

List of Seals

Sl. No.	Name of Parts	Part Number			Quantity	
		HT-03	HT-06	HT-10 HG-10	HT-※	HG-※
1	O – Ring	SO-NB-P4	SO-NB-P4	SO-NB-P4	—	3*
2	O – Ring	SO-NB-P6	SO-NB-P6	SO-NB-P6	4	4
3	O – Ring	SO-NB-P9	SO-NB-P9	SO-NB-P9	—	1*
4	O – Ring	SO-NB-P9	SO-NB-P9	SO-NB-P9	—	2
5	O – Ring	SO-NA-P11	SO-NA-P15	SO-NA-P20	1	1
6	O – Ring	SO-NB-P18	SO-NB-P28	SO-NB-P32	—	2
7	O – Ring	SO-NB-P22	SO-NB-P28	SO-NB-P36	2	2
8	Bonded Seal	SG-FB-1/4	SG-FB-1/4	SG-FB-1/4	2	—

* Used only for HG type with auxiliary pilot pressure (P).
Note: When ordering the seals, Please specify the seal kit numbers from the table right.

List of Seal Kits

Model Numbers	Seal kit Numbers
HT-03	KS-HT-03-22
HT-06	KS-HT-06-22
HT-10	KS-HT-10-22
HG-10-P	KS-HG-10-P-22
HG-10	KS-HG-10-10

HCT-03,06,10-※※-※-2280
HCG-06-※※-※-2180
HCG-06,10-※※-※-21

List of Seals

Sl. No.	Name of Parts	Part Number			Quantity	
		HCT-03	HCT-06 HCG-06	HCT-10 HCG-10	HCT-※	HCG-※
1	O – Ring	SO-NB-P4	SO-NB-P4	SO-NB-P4	—	3*
2	O – Ring	SO-NB-P6	SO-NB-P6	SO-NB-P6	4	4
3	O – Ring	SO-NB-P9	SO-NB-P9	SO-NB-P9	—	1*
4	O – Ring	SO-NB-P9	SO-NB-P9	SO-NB-P9	—	2
5	O – Ring	SO-NA-P11	SO-NA-P15	SO-NA-P20	1	1
6	O – Ring	SO-NB-P12	SO-NB-P18	SO-NB-P22A	1	1
7	O – Ring	SO-NB-P18	SO-NB-P28	SO-NB-P32	—	2
8	O – Ring	SO-NB-P22	SO-NB-P28	SO-NB-P36	2	2
9	Bonded Seal	SG-FB-1/4	SG-FB-1/4	SG-FB-1/4	2	—

* Used only for HG type with auxiliary pilot pressure (P).
Note: When ordering the seals, Please specify the seal kit numbers from the table right.

List of Seal Kits

Model Numbers	Seal kit Numbers
HCT-03	KS-HCT-03-22
HCT-06	KS-HCT-06-21
HCT-10	KS-HCT-10-22
HCG-06-P	KS-HCG-06-P-21
HCG-06	KS-HCG-06-21
HCG-10-P	KS-HCG-10-P-21
HCG-10	KS-HCG-10-21